A DEVICE TO AID IN EXAMINING THE BRAIN AND MENINGES OF DEER FOR HELMINTH PARASITES*

Author: SMITH, JAMES F.

Source: Journal of Wildlife Diseases, 8(2) : 109-111

Published By: Wildlife Disease Association

URL: https://doi.org/10.7589/0090-3558-8.2.109

A DEVICE TO AID IN EXAMINING THE BRAIN AND MENINGES OF DEER FOR HELMINTH PARASITES*

JAMES F. SMITH, Southeastern Cooperative Wildlife Disease Study, Department of Parasitology, College of Veterinary Medicine, University of Georgia, Athens, U.S.A. 30601

Abstract: A vise-like apparatus consisting of movable plates with "teeth", which can be clamped to a table top, has been found to be of value as an aid in securing the heads of white-tailed deer *(Odocoileus virginianus)* for examination for meningeal worms *(Pneumostrongylus tenuis)*. This apparatus also has been valuable as an adjunct to necropsy procedures when studying various types of cranial injuries, cerebral abscesses, and for examining the turbinates for nasal bots *(Cephenemyia phobifera)*.

INTRODUCTION

During the course of a regional survey to determine the geographic distribution of *P. tenuis* in white-tailed deer *(O. virginianus)* in the southeastern United States,[1] a device was developed for holding a deer head for removal of the intact

* Development of this equipment was supported by an appropriation from the Congress of the United States, with funds administered and research coordinated under the Federal Aid in Wildlife Restoration Act (50 Stat. 917) and through Contract No. 14-16-0008-777, Bureau of Sport Fisheries and Wildlife, U.S. Department of the Interior.

brain and meninges from the cranial vault. Since many investigators now have become engaged in collecting and studying the parasites of deer and related big game animal species, this implement and its usages are herein described.

MATERIALS AND METHODS

Materials needed for construction of the device consist of: (a) two 15.2 cm C clamps cut in half; (b) two 1.3 cm ID X 6.4 cm long thin walled tubing; (c) two 1.0 cm X 23.0 cm cold rolled steel rods; (d) one 0.6 cm steel plate 7.6 cm X 10.4 cm; (e) six 1.0 cm X 4.4 cm pointed bolts; (f) one 0.6 cm steel plate 10.2 cm X 12.7 cm with a 2.5 cm X 7.6 cm slot in one side; (g) one 3.2 cm X 3.8 cm guide cup; (h) one 1.3 cm nut; (i) one threaded rod 1.3 cm X 38.1 cm; (j) one 0.6 cm steel plate 10.1 cm X 12.7 cm; and (k) one channel iron 7.6 cm X 25.4 cm. After the above items are measured and fitted, the apparatus is assembled by welding.

One end of each of the C clamps (a) is welded to the channel iron (k) for securing the device to a table top. A 0.6 cm steel plate (7.6 cm X 11.4 cm) (d, j) is welded on each end of the channel iron. One of these plates serves as an anchor for the threaded rod (i) which is attached at one end to a third 0.6 cm steel plate (7.6 cm X 11.4 cm) (f) which is movable. As the threaded rod is rotated, the movable plate moves to allow for opening and closing of the device. The movable plate is guided by attached steel rods (c) which pass through sleeves constructed of thin walled tubing (b) which is welded to the body of the channel iron. Each of the two steel plates which holds the head of the deer to be examined has three pointed bolts (1.0 cm X 3.2 cm) (e) attached which serve to anchor the head securely. The completed implement is shown in Fig. 1.

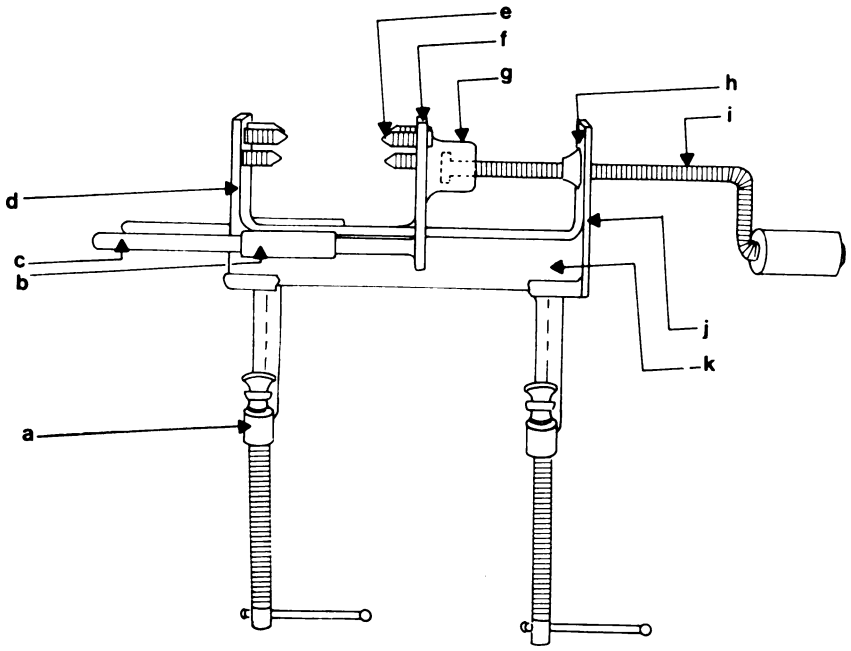

FIGURE 1. Schematic illustration of head holding device.

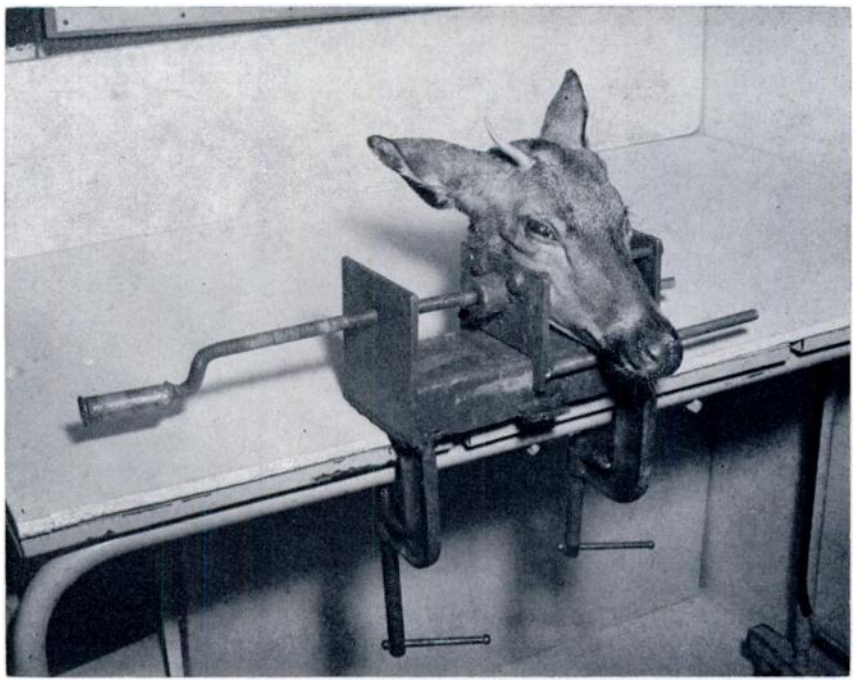

FIGURE 2. Head secured in head holding device.

When in use the device is mounted on a sturdy table. A deer head is placed between the "teeth" in a dorso-ventral position, and a few turns of the handle will secure the cranium for extrication of the brain and meninges (Fig. 2). Removal of the brain and meninges then is accomplished in acordance with procedures described by Prestwood and Smith.[1]

COMMENTS

Although this device has been used primarily for facilitating the collection of *P. tenuis* from more than 1000 white-tailed deer, it also has been very helpful in revealing various types of cranial injuries, and cerebral abscesses, and for examining the turbinates for nasal bots *(Cephenemyia phobifera).*

LITERATURE CITED

1. PRESTWOOD. ANNIE K., and JAMES F. SMITH. 1969. Distribution of meningeal worm *(Pneumostrongylus tenuis)* in deer in the southeastern United States. J. of Parasit. 55: 720-725.

Received for publication January 11, 1972