BioOne COMPLETE

Resilience of Oxygen Consumption Rates in the Juvenile Blue Crab Callinectes sapidus to Future Predicted Increases in Environmental Temperature and pCo2 in the Mesohaline Chesapeake Bay

Authors: Glandon, Hillary L., Paynter, Kennedy T., Rowe, Christopher L., and Miller, Thomas J.

Source: Journal of Shellfish Research, 38(3) : 711-723

Published By: National Shellfisheries Association

URL: https://doi.org/10.2983/035.038.0323

BioOne Complete (complete.BioOne.org) is a full-text database of 200 subscribed and open-access titles in the biological, ecological, and environmental sciences published by nonprofit societies, associations, museums, institutions, and presses.

Your use of this PDF, the BioOne Complete website, and all posted and associated content indicates your acceptance of BioOne's Terms of Use, available at www.bioone.org/terms-of-use.

Usage of BioOne Complete content is strictly limited to personal, educational, and non - commercial use. Commercial inquiries or rights and permissions requests should be directed to the individual publisher as copyright holder.

BioOne sees sustainable scholarly publishing as an inherently collaborative enterprise connecting authors, nonprofit publishers, academic institutions, research libraries, and research funders in the common goal of maximizing access to critical research.

Downloaded From: https://complete.bioone.org/journals/Journal-of-Shellfish-Research on 16 Jul 2024
Terms of Use: https://complete.bioone.org/terms-of-use

Journal of Shellfish Research, Vol. 38, No. 3, 711–723, 2019.

RESILIENCE OF OXYGEN CONSUMPTION RATES IN THE JUVENILE BLUE CRAB *CALLINECTES SAPIDUS* TO FUTURE PREDICTED INCREASES IN ENVIRONMENTAL TEMPERATURE AND pCO_2 IN THE MESOHALINE CHESAPEAKE BAY

HILLARY L. GLANDON,[1]*† KENNEDY T. PAYNTER,[1,2] CHRISTOPHER L. ROWE[1] AND THOMAS J. MILLER[1]

[1]*Chesapeake Biological Laboratory, University of Maryland Center for Environmental Science, 146 Williams Street, Solomons, MD 20688;* [2]*Marine, Estuarine, Environmental Sciences, University of Maryland, 1213 HJ Patterson Hall, College Park, MD 20742*

ABSTRACT Quantifying the physiological impact of environmental stressors on living organisms is critical to predicting the response of any given species to future climate scenarios. Oxygen consumption rates (μmol/g/min) were measured to examine the physiological response of the juvenile blue crab *Callinectes sapidus* from the Chesapeake Bay (Patuxent River, Maryland) to elevated temperature and dissolved carbon dioxide in water (pCO_2) reflective of projected future climate scenarios. Treatment levels were selected to represent current conditions in the Chesapeake Bay (26°C and 800 μatm) and conditions predicted to occur by the year 2100 (31°C and 8,000 μatm). Crabs were exposed in a factorial design to these conditions throughout two successive molts (approximately 30 days). At the end of the exposure, the oxygen consumption rates of individual crabs were determined over at least a 10-h period using a flow-through respiration chamber equipped with optical oxygen electrodes. No significant effect of temperature or pCO_2 on oxygen consumption was observed, suggesting the absence of a respiratory impact of these two climate stressors on juvenile blue crabs. Oxygen consumption rates were also determined for crabs that experienced a rapid increase in temperature without prior acclimation. The oxygen consumption rate of crabs may have acclimated to increased temperature during the 30-day exposure period before respiratory measurement. This potential acclimation, combined with high individual variability, and a relatively small difference in temperature treatments are likely the cause for the lack of a statistically significant difference in mean oxygen consumption rates by temperature in the core experiment. The results of this study suggest that the blue crab may be quite resilient to future climate stressors and underscore the need for species-specific studies to quantify the effects of climate change on estuarine crustaceans.

KEY WORDS: oxygen consumption, blue crab, *Callinectes sapidus*, climate change

INTRODUCTION

Highly variable environments, both naturally occurring and human-induced, favor species with high genetic variability and/or a high degree of phenotypic plasticity. Ontogenetic shifts in habitat use often cause an individual to experience substantially different conditions throughout life, thereby favoring genetic and phenotypic variability at both the individual and population levels. This variability can be seen particularly in traits such as growth and metabolism, which regulate the length of exposure to life-stage–specific sources of mortality, as has been observed in a variety of processes from larval fish growth rates and development (Bertram et al. 1997) to amphibian size at metamorphosis (Wilbur & Collins 1973, Werner 1986). Thus, quantifying the response of key physiological parameters to a changing environment is critical to understanding how populations may respond to climate stressors in the future (Pörtner et al. 2005, Pörtner & Farrell 2008).

The historic global combustion of fossil fuels has increased the temperature and the amount of carbon dioxide in the atmosphere, and consequently has also increased the temperature and the amount of dissolved carbon dioxide (pCO_2) in the ocean (Doney & Schimel 2007, Stocker et al. 2013). Increasing anthropogenic influences are creating a warmer, more acidified marine environment that is changing at a rate beyond that has been experienced in the past (Hönisch et al. 2012, Zeebe et al. 2016). Marine invertebrates are an ideal taxa in which to examine the physiological effects of increased temperature and pCO_2 because they are prolific in a wide range of environmental conditions and, therefore, may be used as an indicator of overall ecosystem response to environmental changes.

One metric of the physiological response of individuals to environmental change is metabolism, which in poikilotherms, such as the blue crab, is governed by external temperature. Oxygen consumption rates are often used as proxies for metabolism because of the difficulties in estimating true metabolic rates. The relationship between temperature and oxygen consumption rates in marine invertebrates has been studied in a variety of species (Newell & Branch 1980, Gillooly et al. 2001, Gaitán-Espitia et al. 2017). Oxygen limitation has been proposed as an explanation for reductions in aerobic scope outside of the optimal thermal window in many species (Pörtner & Farrell 2008, Pörtner 2010). A positive relationship between temperature and oxygen consumption rate has been well characterized in decapod crustaceans from the larval stage through the adult life stage (Leffler 1972, Breteler 1975, Eriksson & Edlund 1977, Gutermuth & Armstrong 1989, Booth & McMahon 1992) and has been linked to the high ventilation rates observed in this taxon (Frederich & Pörtner 2000). Despite this established relationship, high variability in oxygen consumption rates is also present in decapod crustaceans. In the

*Corresponding author. E-mail: glandonh@uncw.edu

†Current address: Hillary L. Glandon, Department of Biology and Marine Biology, University of North Carolina Wilmington, 601 S. College Road, Wilmington, NC 28403.

DOI: 10.2983/035.038.0323

Downloaded From: https://complete.bioone.org/journals/Journal-of-Shellfish-Research on 16 Jul 2024
Terms of Use: https://complete.bioone.org/terms-of-use

studies cited, coefficients of variation of oxygen consumption rates among individuals in these taxa range from 14% to 60%, depending on the temperatures tested. Q_{10} represents the change in a physiological rate over a 10°C increase in temperature and provides a standardized index of thermal response, which can be compared among species or treatments if the Q_{10} is consistently calculated over the same temperature range. Oxygen consumption rate Q_{10} values typically range between 2 and 3 for most physiological functions in poikilotherms (Běhrádek 1930). In the crustacean studies cited earlier, oxygen consumption rate Q_{10} values ranged from approximately 1 to 12, depending on the temperatures and species tested, with mean oxygen consumption rate Q_{10} values between 2 and 5.

In contrast to the number of studies on the effects of temperature on metabolic rate (presented earlier), there have been fewer studies examining the effects of increased pCO_2 on indicators of metabolism (acid–base regulation, metabolic rate, respiration rate, and oxygen consumption rate) of marine invertebrates, but a range of responses have been reported (Kroeker et al. 2010). Although each indicator of metabolism quantifies slightly different physiological parameters, each is an approximation of metabolic rate and can, therefore, be examined comparatively. Declines in oxygen consumption rates as a result of exposure to decreased pH/increased pCO_2 have been observed in a variety of species, including the infaunal brittlestar *Amphiura filiformis* (Hu et al. 2014) and the Chilean mussel *Mytilus chilensis* (Navarro et al. 2016). Conversely, increases in oxygen consumption rates in response to decreased pH/increased pCO_2 have been reported in the juvenile eastern oyster *Crassostrea virginica* (Beniash et al. 2010). Several species demonstrate no metabolic response to changes in pH/pCO_2, including abalone, *Haliotis iris* (Cunningham et al. 2015), the common cuttlefish *Sepia officinalis* (Sigwart et al. 2015), and larvae of the Pacific oyster *Crassostrea gigas* (Frieder et al. 2016). Importantly, additive effects of increased temperature and pCO_2 on the oxygen consumption rate have been observed in adults of the Pacific oyster *C. gigas* (Lannig et al. 2010), and the Arctic pteropod *Limacina helicina* (Comeau et al. 2010), such that the oxygen consumption rate in both species was highest in individuals exposed to the high temperature/high pCO_2 treatments. The duration and type of exposure (e.g., acute, long-term, or cycling) to increased pCO_2 as well as individual and life-stage–specific capacity for acid–base regulation both contribute to the variability of these responses (Pörtner et al. 2004, Todgham & Stillman 2013).

Similar to the trends in marine invertebrates in general (Lefevre 2016), the effect of decreased pH/increased pCO_2 on indicators of metabolism (i.e., acid–base regulation, metabolic rate, respiration rate, and oxygen consumption rate) in decapod crustaceans appears to be species and life-stage specific. The acid–base regulatory capacity of the Tanner crab *Chionoecetes tanneri*, which lives at ~1,000 m depth, was compromised when adults were exposed to acute hypercapnia, whereas the regulatory capacity of the shallow-living Dungeness crab *Cancer magister* was unaffected by a similar exposure (Pane & Barry 2007). In the adult velvet swimming crab *Necora puber*, oxygen uptake significantly declined under acidified conditions (Small et al. 2010). Only the embryonic stage of the porcelain crab *Petrolisthes cinctipes* experienced a significant decline in the oxygen consumption rate when exposed to increased pCO_2; no effect was observed in the larval or juvenile stage (Carter et al. 2013). Decreases in oxygen consumption rate as a result of exposure to decreased pH/increased pCO_2 were observed in the late-stage larvae of the European lobster *Homarus gammarus*, whereas the opposite effect was reported in the early stage larvae of the European lobster (Small et al. 2015). In addition, nonlinear effects of temperature and pCO_2 have been observed in the adults of the edible crab *Cancer pagurus* (Metzger et al. 2007) and the nektonic shrimp *Metapenaeus joyneri* (Dissanayake & Ishimatsu 2011). Kroeker et al. (2013) summarized the combined effects of increased temperature and acidity on marine species in general, concluding that increased temperature generally exacerbated the negative effects of increased acidity, and also commented on the large range of responses observed throughout the species examined. The variability in response to increased temperature and pCO_2 experienced by decapod crustaceans underscores the need for life-stage– and species-specific studies examining the effects of climate stressors on key physiological parameters, such as metabolic rate.

Although the number of studies on the physiological effects of climate change in estuarine species is increasing, the current knowledge base is biased toward work carried out on species living in the marine environment. Estuarine and coastal systems are some of the most productive regions on earth and are characterized by large and frequent fluctuations in environmental parameters, including temperature and pCO_2 (Cai & Wang 1998, Waldbusser & Salisbury 2014). Differences in environmental exposure may form the basis for the large range of observed physiological responses, underscoring the importance of quantifying the effects of climate change specifically on estuarine species (Cooley & Doney 2009). The metabolic response of estuarine bivalves to climate change has recently been investigated, revealing an elevated cost of basal metabolic maintenance in the hard shell clam *Mercenaria mercenaria*, the eastern oyster *Crassostrea virginica*, and the Pacific oyster *Crassostrea gigas* (Lannig et al. 2010, Matoo et al. 2013). Despite existing information on marine crustaceans, knowledge of the effect of climate change stressors on the oxygen consumption rate of estuarine crustaceans is limited. The blue crab *Callinectes sapidus* is an ecologically and economically important estuarine crustacean (Baird & Ulanowicz 1989, Kennedy et al. 2007), and, therefore, understanding the response of this species to climate stressors is of great regional concern. The distribution of the blue crab along a wide latitudinal gradient from New England (United States; ~43° N) to Argentina (~38° S) (Williams 1984), combined with the relative lack of information regarding the effects of climate change on estuarine crustaceans, underscores the importance of examining the impact of climate change in this taxon.

Here, oxygen consumption rates of juvenile blue crabs from the mesohaline Chesapeake Bay were quantified in response to two key climate stressors (increased temperature and pCO_2). Treatment levels of temperature and pCO_2 were chosen to reflect current and future predicted climate conditions for the mesohaline Chesapeake Bay by the year 2100 (see Glandon & Miller 2017). The juvenile life stage was examined because of its role in regulating overall crab population dynamics (Miller 2001) and because juveniles are the earliest life stage to live entirely in the estuary (prior development occurs in marine waters). This study supplements the growing body of knowledge on the general impact of climate stressors on estuarine crustaceans. It complements other recent work that has

Downloaded From: https://complete.bioone.org/journals/Journal-of-Shellfish-Research on 16 Jul 2024
Terms of Use: https://complete.bioone.org/terms-of-use

quantified the effects of increased temperature and pCO_2 on the growth and food consumption (Glandon & Miller 2017) and shell properties (Glandon et al. 2018) of juvenile blue crabs.

MATERIALS AND METHODS

Crab Collection and Maintenance

Juvenile blue crabs, approximately 30 mm carapace width (CW), were collected from two principal tributaries of the Chesapeake Bay. Trials were conducted in a randomized complete block experimental design. Block 1 crabs were collected in May 2016 from the Patuxent River, MD, and block 2 crabs were collected in September 2016 from the York River, VA. Experimental crabs were kept in a flow-through system at the Chesapeake Biological Laboratory at one of four temperature/pCO_2 treatments for a period of two molts (approximately 30 days). Treatment levels were selected to represent current mean summer (June–August) temperature and pCO_2 conditions in the Patuxent River (26°C and 800 μatm) and conditions forecast for the year 2100 (31°C and 8,000 μatm). The ambient temperature treatment level was determined using the mean water temperature from June through August in the Patuxent River from the Chesapeake Bay Program Water Quality Database for the decade 2006 to 2016. The future temperature treatment level was based on temperature predictions for the mesohaline Chesapeake Bay outlined in Boesch et al. (2008) and has been confirmed by recent downscaling of global climate models for North America (Maloney et al. 2014). pH data from the Chesapeake Bay Program Water Quality Database were accessed for the period 2008 to 2012, and these data, along with salinity, temperature, and previously determined total alkalinity (TA), were used to determine the mean, minimum, and maximum pCO_2 values experienced in the Patuxent River during that time period. There was a 5-fold difference in the observed range of pCO_2 values; the average minimum pCO_2 was 1,237.9 ± 775.0 μatm (mean ± SD), the average maximum pCO_2 was 6,363.8 ± 1,610.5 μatm, and the average mean pCO_2 was 3,266.7 ± 818.9 μatm during all years and months sampled. Using these data, 800 μatm was identified as the low treatment level because it was below average summertime conditions, but not below the annual pCO_2 average for that time period, which was 642.8 ± 346.7 μatm. 8,000 μatm was identified as the high pCO_2 treatment level because it was above the average summertime pCO_2 level, but within the maximum values observed during that time period, which for August 2010 was 10,204 ± 1,923.3 μatm. Pilot experiments revealed no effect of pCO_2 levels as high as 10,000 μatm on crab survival and growth.

Details on the flow-through system for exposure of individuals to treatment conditions are given in Glandon and Miller (2017), and a schematic of the exposure system is provided in Figure 1A. A three-tiered tank system was constructed at the Chesapeake Biological Laboratory, in which temperature and pCO_2 were manipulated to the desired conditions. Tier 1 consisted of two 100-gallon tanks where temperature was manipulated through the addition of heated, filtered Chesapeake Bay water drawn from the Patuxent River. Water from each tier 1 tank flowed gravimetrically into four tier 2 tanks (eight tier 2 tanks in total), where pCO_2 was manipulated through a "pH stat" system *via* the regulated addition of CO_2 gas. This resulted in a 2 × 2 temperature × pCO_2 design with two levels of replication of each temperature/pCO_2 treatment. Water from each tier 2 tank flowed gravimetrically, but separately, into 10 tier 3 tanks, each containing an individual blue crab (80 tier 3 tanks in total). Crabs were fed frozen bay scallops *ad libitum* to avoid effects of food limitation on oxygen consumption rates (O'Connor et al. 2009). Water from the tier 2 tanks (one per temperature/pCO_2 replicate) was provided to the respiration system (described in the following paragraph and in Fig. 1B) through a valve, which allowed for the environmental conditions in each respiration assay to be the same as the conditions in which the crab was acclimated.

Carbonate System Parameters

All pH electrodes were calibrated weekly to a pH of 3 in a 0.25 M NaCl solution (approximately equal to the molarity of the experimental system) based on previously verified Nernstian behavior of the electrodes. Because the salinity was stable during the course of the experiment, no correction for changes in salinity was used during this study. pH was measured once per second in each tier 2 tank using a mounted glass combination pH electrode and three times daily in each tier 3 tank using a handheld Orion Ross double-junction refillable glass electrode. In the respiration system, pH was measured once per second in the header tank using a mounted glass combination pH electrode, and directly before and directly after each respiration assay using a handheld Orion Ross double-junction refillable glass electrode. Total alkalinity (μmol/kg-sw) was determined weekly in each tier 2 tank and in three randomly selected tier 3 tanks per tier 2 tank through two-point Gran titration using 0.1 M hydrochloric acid (Edmond 1970). Accuracy comparisons were performed using certified reference materials (Dickson et al. 2003). Water samples collected for alkalinity were filtered through 0.45 μm filters and stored in sterilized Pyrex glass bottles (Dickson et al. 2007). The software CO2SYS (Lewis & Wallace 1998) was used to calculate pCO_2 levels in each tier 2 and tier 3 tank using the measured pH and TA data, in addition to recorded temperature and salinity. The CO_2 constants used (K1, K2) were from Mojica Prieto and Millero (2002), the protonation constant of bisulfate (HSO_4^-) was taken from Dickson (1990), and the total borate concentration was calculated from salinity (chlorinity) as per Uppström (1974).

Respiration Chamber Design

Oxygen consumption of individual juvenile crabs was quantified in continuous flow-through respiration chambers (see Fig. 1B). Flow-through respirometers were constructed so that extended trials could be conducted to minimize handling effects on oxygen consumption rates. Each 1.64 L cubic respirometry chamber was constructed of 1.3 cm thick Plexiglass with a 0.6-cm 70-durometer silicone gasket. Holes (0.6 cm) were drilled on two opposite sides of the chamber to allow for inflow and outflow of water. A digital flowmeter was constructed using a Hall-effect sensor (0.6 cm OD plastic; Uxcell, Hong Kong) connected to a Uno R3 board (Arduino AG, Italy). The Arduino board was used to measure and record the water flow into the chamber throughout the trial. The flowmeter and a PyroScience FireSting flow-through oxygen electrode (model OXFTC; PyroScience GmbH, Aachen, Germany) were placed in line before the inflow port, and an additional flow-through

Downloaded From: https://complete.bioone.org/journals/Journal-of-Shellfish-Research on 16 Jul 2024
Terms of Use: https://complete.bioone.org/terms-of-use

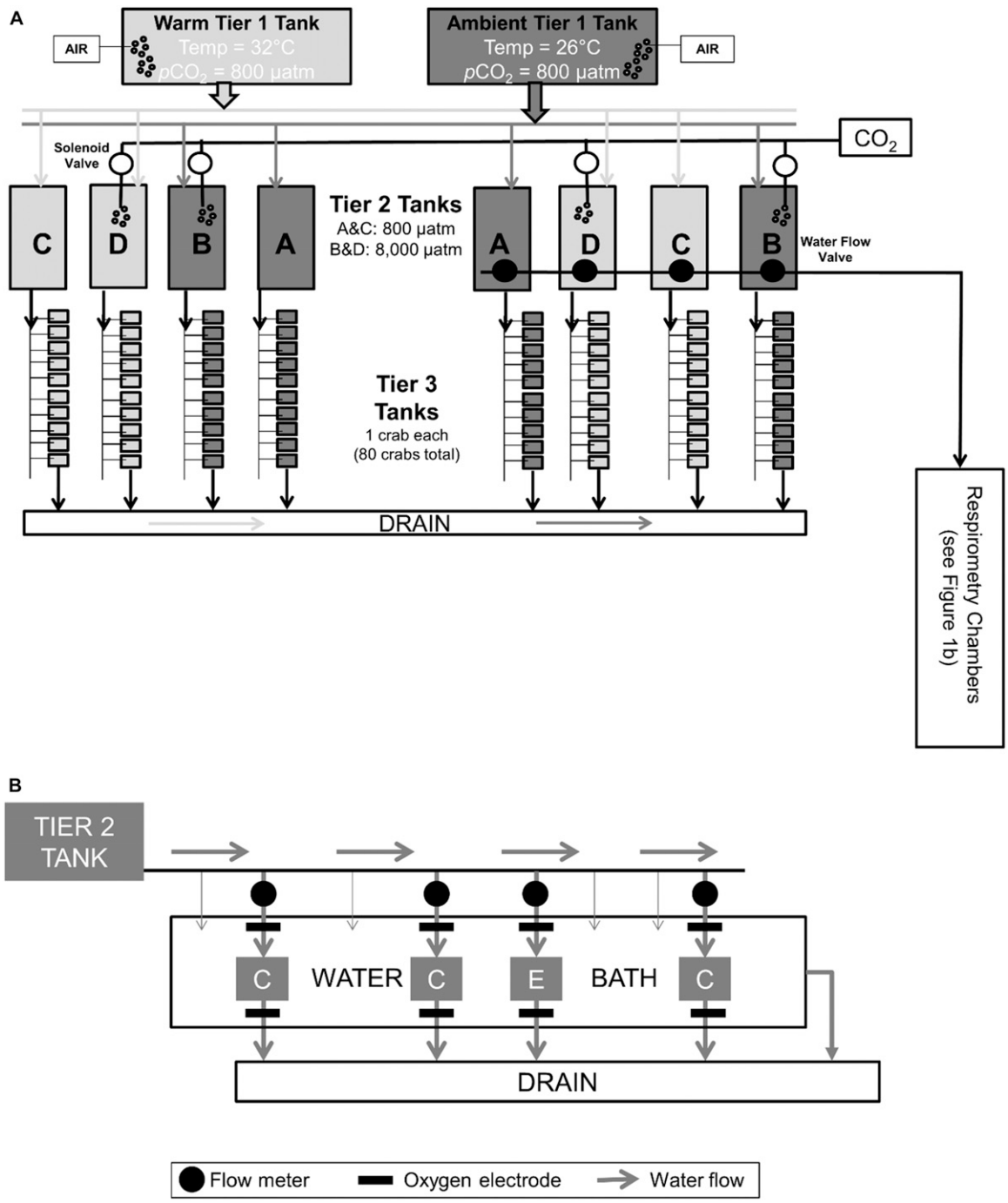

Figure 1. (A) Schematic of the acclimation system used in this study. Tier 1 tanks (100 gallons) were provided with Patuxent River water and maintained at either 26°C or 32°C using a combination of heated and chilled water and vigorously bubbled with compressed air. Water from the tier 1 tanks then flowed continuously into eight 35-gallon tier 2 tanks (A–D) where manipulation of pCO_2 took place. Each tier 2 tank contained a glass combination pH electrode that monitored and recorded the pH of the water once per second. Manipulation of pCO_2 occurred in tanks B and D, acidifying the water in those tanks to 8,000 µatm, while the pCO_2 in tanks A and C remained at 800 µatm. Treated water flowed continuously from each tier 2 tank gravimetrically to 10 2.5-gallon tier 3 tanks, each containing an individual crab. Water from individual tier 3 tanks never interacted with water from other tier 3 tanks; tier 3 tank water flowed into the drain directly from the tank it entered. Water from the tier 2 tanks (one per temperature/pCO_2 replicate) was provided to the respiration system (described in B) through a valve, which allowed for the conditions in each respiration assay to be the same as the conditions in which the crab was acclimated. (B) Schematic of respirometry chambers used to quantify oxygen consumption of juvenile blue crabs in this study. Water was mixed in a tier 2 tank (the tier system described in A) to the desired temperature and pCO_2 and then flowed (gray arrows) into a PVC pipe that fed both the respiration chambers and the water bath used to maintain temperature. Water passed through a flowmeter (black circle) and an in-line optical oxygen electrode (black rectangle) before entering the chamber. Each chamber contained a single crab (C), and at least one chamber per assay was empty (E). Note that the order of the treatments in each trial was randomized. Water flowed out of the respirometry chamber past another optical oxygen electrode before going into the drain.

Downloaded From: https://complete.bioone.org/journals/Journal-of-Shellfish-Research on 16 Jul 2024
Terms of Use: https://complete.bioone.org/terms-of-use

oxygen electrode was placed in line after the outflow port. Water was provided to the respiration system through the redirection of tier 2 tank water from the experimental system into the respiration chamber system (Fig. 1A, B). Respiration chamber water was, therefore, specific for each temperature/pCO_2 combination, and flowed, gravimetrically but separately, into respiration chambers and a water bath. Because the chambers and the water bath were filled from a single tier 2 tank, only one treatment combination was run during a given assay (one night). A maximum of four individual chambers were run per assay, with a single crab in each chamber, except for at least one empty chamber which served as a blank to account for microbial respiration and ambient conditions during each assay. Oxygen concentration data from the blank chambers were also used to verify whether crabs were receiving adequately oxygenated water during the overnight assays. Crab and blank treatments were assigned randomly to specific chambers for each assay.

Oxygen Consumption Measurements

Crabs were selected for measurement of oxygen consumption after two molts were completed in the experimental system (approximately 30 days). To control for possible effects of molt stage on oxygen consumption, rates were measured on individual crabs that were between 5 and 10 days after the second molt, when crabs were reliably in stage C_4 (Chang 1995). Because the respiration chamber design allowed for crabs from only one temperature/pCO_2 treatment to be measured per assay, and the intermolt period of crabs was expectedly variable, the oxygen consumption rates of one to three individual crabs (from the same temperature/pCO_2 treatment) were measured per assay. Oxygen consumption rates of crabs were measured at the same temperature/pCO_2 treatment that the crabs were acclimated to for the 30 days before measurement. The oxygen consumption rate of individual crabs was measured once per individual after the conditions described previously were met.

A temperature shock experiment was conducted to test the hypothesis that the oxygen consumption rate of crabs had acclimated to the high temperature treatment during the acclimation period. For these individuals, the oxygen consumption rates of crabs that were acclimated at ambient temperature/ambient pCO_2 were measured at high temperature/ambient pCO_2. In these assays, water was provided to the respiration system from a high temperature/ambient pCO_2 tier 2 tank, despite the crabs being acclimated to ambient temperature/ambient pCO_2 conditions. It was expected that the oxygen consumption of these individuals would be significantly higher than the individuals that were tested at their acclimation temperature, confirming that the system design could accurately measure the response of crabs to environmental stressors, such as increased temperature and pCO_2. The oxygen consumption rates of crabs selected for the temperature shock experiment were only determined at high temperature conditions, not at the ambient temperature conditions to which they were acclimated.

All trials were conducted for at least 10 h between 18:00 and 9:00 h, the time of day that blue crabs are typically least active (Lipcius et al. 2007). Crabs were fed daily while in the experimental system and were starved for 24 h before measurement. Oxygen electrodes were calibrated in freshwater fully saturated with air before each overnight trial, and the electrodes were configured to compensate for the salinity of water in the flow-through system (salinity: 12–15). Measurements of oxygen concentration and flow were taken once per second. Oxygen electrodes and flowmeters were cleaned in a solution of soapy water and then flushed for at least 1 h with freshwater after each overnight trial. Respirometry chambers were cleaned with bleach and freshwater after each overnight trial.

Oxygen Consumption Calculations

Oxygen consumption (R; μmol/g/min) was determined for each respirometry chamber individually. First, the residence time (T_R; min) of the water in the chamber was determined as

$$T_R(\text{min}) = (V/F_A), \tag{1}$$

where V is the volume of the chamber (L) and F_A is the average flow (L/min) for each chamber in each trial.

The residence time was used to determine a shift that was applied to the outflow data, such that the oxygen concentration of the water used in calculations was shifted by T_R, to take into account the residence time of the water in the chamber. For example, if the residence time of the water (T_R) in the chamber was 200 sec, then the oxygen concentration of the outflow water (μmol/L) at 201 sec into the trial was subtracted from the oxygen concentration of the inflow water (μmol/L) at 1 sec into the trial. The shifted outflow oxygen concentration was then represented as O_{OTR} (μmol/L). The difference between the concentration of oxygen in the inflow and outflow water was determined as

$$D_O = O_i – O_{OTR}, \tag{2}$$

where O_i is the concentration of oxygen (μmol/L) in the water flowing into the chamber and O_{OTR} is the time-shifted concentration of oxygen (μmol/L) in the water flowing out of the chamber. The uncorrected oxygen consumption rate, R_U, in μmol/min, was determined by

$$R_U = D_O * F, \tag{3}$$

where D_O is as defined in Eq. 2 and F is the flow rate (L/min) at that same time point. The estimate of oxygen consumption was corrected to account for microbial respiration in the respirometer by

$$R_C = R_U(\text{crab}) – R_U(\text{blank}), \tag{4}$$

where R_U (crab) is the average oxygen consumption rate (μmol/min) for an individual crab (Eq. 3) and R_U (blank) is the average oxygen consumption rate of all blanks conducted during an individual overnight trial. Finally, the mass-specific oxygen consumption rate was determined as

$$R = R_C/m, \tag{5}$$

where R_C is the corrected oxygen consumption rate of an individual crab (μmol/L; Eq. 4) and m is the wet mass of the whole crab.

Data Analysis

The mean mass-specific oxygen consumption rate (R in μmol/g/min; ±SD) was determined for each crab for each overnight trial, excluding the first hour of measurement to avoid

Downloaded From: https://complete.bioone.org/journals/Journal-of-Shellfish-Research on 16 Jul 2024
Terms of Use: https://complete.bioone.org/terms-of-use

influences of acute handling stress. Crab size was controlled in this study (wet mass = 5.2 ± 1.6 g), and therefore, it was not necessary to account for large deviations from an isometric relationship between crab mass and oxygen consumption rate (Beaupre & Dunham 1995, Poehlman & Toth 1995).

To test for the effect of a rapid increase in temperature (temperature shock experiment) on the oxygen consumption rate of juvenile blue crabs, a one-way ANOVA was conducted with mass-specific oxygen consumption as the response and temperature treatment as the fixed effect. Treatments compared for this analysis were (1) crabs acclimated and tested at ambient temperature, (2) crabs acclimated and tested at high temperature, and (3) crabs acclimated at ambient temperature and tested at high temperature.

A separate analysis examined the individual and interactive effects of temperature and pCO_2 on respiration. A three-way ANOVA was conducted with mass-specific oxygen consumption as the response and block, temperature, and pCO_2 as fixed effects. If block and/or interaction effects were determined to be nonsignificant in the overall model, the model was rerun without the block and/or the interaction to improve the power of main effects. A Tukey *post hoc* test was conducted if significant main effects were observed.

All analyses were conducted in R (version 3.2.2; R Core Team 2015) using RStudio (version 1.0.136). Significance of fixed effects and their interactions was assessed using the *Anova* function on linear-mixed effect models using the *car* (Fox & Weisberg 2010) and *nlme* packages (Pinheiro et al. 2015).

RESULTS

Table 1 presents the parameters of the carbonate system for each temperature/pCO_2 treatment combination for the duration of the experiment. Temperature, salinity, pH, and TA were measured during the course of the experiment. pCO_2 was calculated from the measured parameters. Productive systems such as estuaries can have large daily cycles in pCO_2 levels; high cellular respiration rates at night cause increases in pCO_2 and, therefore, declines in pH levels, whereas daytime photosynthesis rates outcompete respiration rates, causing decreases in overall pCO_2 and increases in pH levels. Much of the variability present in the pCO_2 concentrations was due to the high cycling present in estuarine ecosystems and in the experimental control system. The experimental control system maintained clear differences among all temperature and pCO_2 treatments during the acclimation and measurement periods, while maintaining consistent TA among all treatments. Total alkalinity titrations were accurate to 0.20% as compared with certified reference materials (Dickson et al. 2003).

The oxygen consumption of 48 individual crabs was quantified during this study. An example of data produced from a single overnight trial is shown in Figure 2, highlighting the variability in observations. Data from a representative blank chamber are shown in the top panel in Figure 2. The difference between the inflow and outflow was between 0 and 5 μmol/L for the entire trial. The bottom panel in Figure 2 shows data from an individual crab, with the difference between the inflow and outflow being closer to 10 μmol/L for the trial. The precision of the oxygen electrodes throughout the course of the experiment was determined using replicate blank chambers run during the same overnight trial, and was quantified as 2.45 ± 1.46 μmol/L. The sample size, mean, and SD of the mass-specific oxygen consumption of crabs by block and temperature/pCO_2 treatment are presented in Table 2. Available oxygen concentrations were determined using data from blank chambers during each assay and indicate adequate oxygenation of water. Flow rates varied by individual respiration chamber and assay, with an average flow rate during the course of the experiment of 150.8 ± 40.0 mL/min. Because the chamber volume was 164 mL, the observed flow rate allowed for the chambers to be flushed approximately every 60–80 sec, providing adequate oxygen to the crabs in the chambers.

Temperature Shock Experiment

The one-way ANOVA indicated a significant effect of temperature treatment on the mass-specific oxygen consumption of crabs ($F_{2,26} = 4.51$, $P = 0.021$; Fig. 3) in the temperature shock experiment. Tukey *post hoc* tests revealed that the mass-specific oxygen consumption of crabs acclimated and tested at ambient temperature (R = 0.17 ± 0.07 μmol/g/min) was significantly lower than the mass-specific oxygen consumption of crabs acclimated at ambient temperature and tested at high

TABLE 1.

Mean and SD of carbonate system parameters for the duration of the experiment, by block and temperature/pCO_2 treatment.

			Temperature (°C)		Salinity		pH (total scale)		TA (μmol/kg-sw)		pCO_2 (μatm)	
Block	Temperature	pCO_2	Mean	SD	Mean	SD	Mean	SD	Mean	SD	Mean	SD
1	Amb	Amb	25.6	1.4	12.6	0.3	7.7	0.15	1,464.30	32.5	835.2	44.7
		High	26.0	1.9	12.7	0.3	6.8	0.09	1,470.70	39.1	7,690.8	166.2
	High	Amb	30.5	0.7	12.8	0.3	7.7	0.14	1,417.30	42.9	821.6	36.8
		High	30.7	0.5	12.5	0.3	6.7	0.06	1,430.80	22.7	8,141.0	152.4
2	Amb	Amb	25.8	0.8	14.8	0.7	7.7	0.11	1,489.60	29.4	817.4	39.7
		High	25.8	2.1	14.3	0.7	6.7	0.05	1,501.40	22.5	8,860.9	137.4
	High	Amb	30.7	0.9	14.5	0.7	7.7	0.10	1,494.40	34.6	840.2	60.9
		High	30.9	0.7	14.8	0.7	6.7	0.04	1,472.20	17.8	8,860.8	124.7

Temperature and salinity were measured daily, pH (total scale) was measured once per second, and TA was measured weekly. Amb, ambient.

Downloaded From: https://complete.bioone.org/journals/Journal-of-Shellfish-Research on 16 Jul 2024
Terms of Use: https://complete.bioone.org/terms-of-use

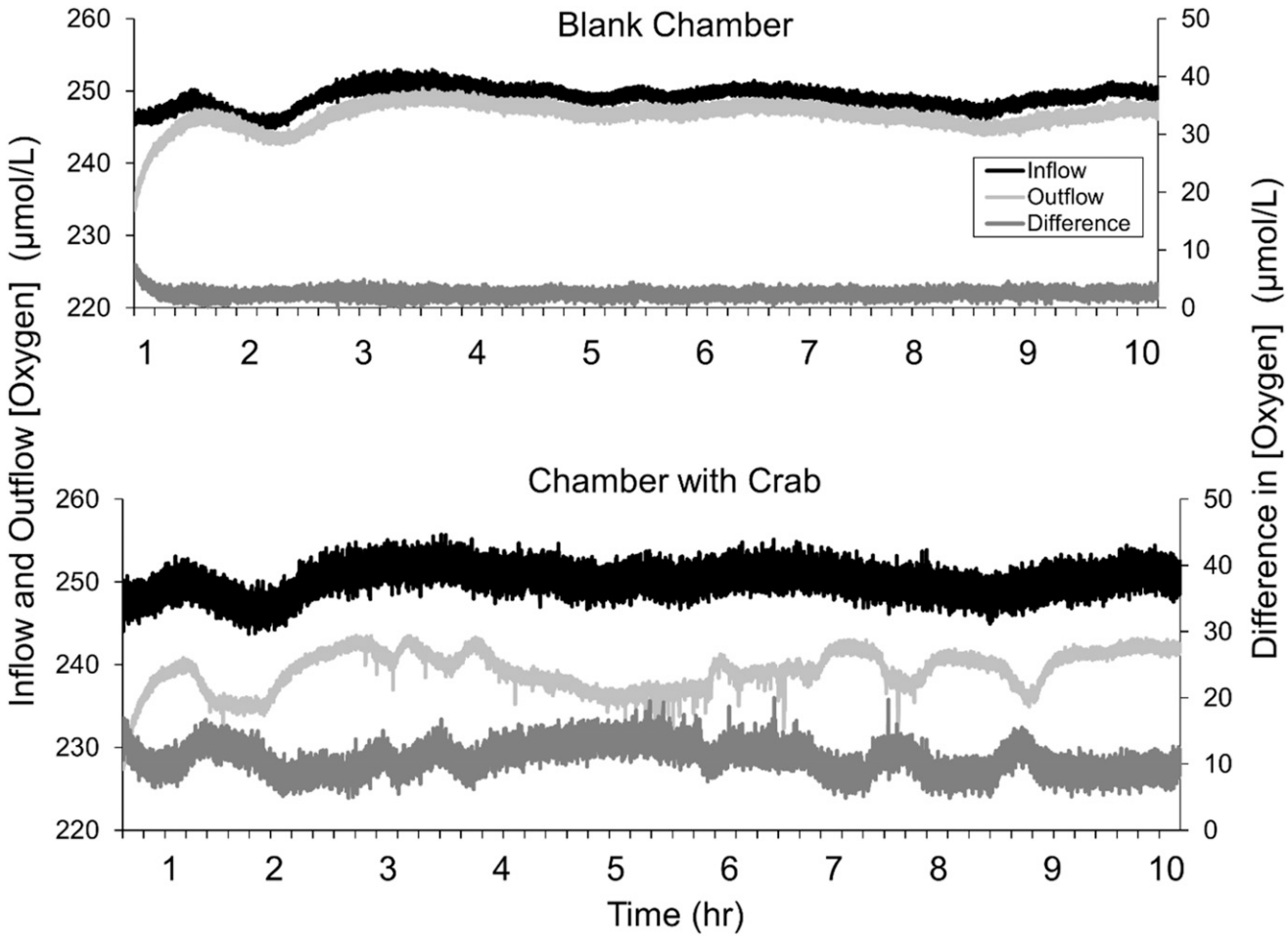

Figure 2. Example of data from an overnight respiration trial of an empty chamber (top) and a chamber with a single juvenile blue crab (bottom). Inflow oxygen concentration (µmol/L; black), outflow oxygen concentration (µmol/L; light gray), and the difference between the inflow and the outflow (µmol/L; dark gray) are shown in both plots.

temperature ($R = 0.65 \pm 0.33$ µmol/g/min; $t_{2,25} = 2.98$, $P = 0.016$). In addition, the mass-specific oxygen consumption of crabs acclimated and tested at high temperature ($R = 0.26 \pm 0.18$ µmol/g/min) was lower than the mass-specific oxygen consumption of crabs acclimated at ambient temperature and tested at high temperature ($R = 0.65 \pm 0.33$ µmol/g/min; $t_{2,25} = 2.17$, $P = 0.092$). There was no significant difference between the mass-specific oxygen consumption of crabs acclimated and

TABLE 2.

Sample size, mean, and SD of the CW, wet mass, and oxygen consumption rate (µmol/g/min) of juvenile blue crabs used in this study by temperature/pCO_2 treatment.

Treatment			Crab CW (mm)		Crab wet mass (g)		Inflow oxygen concentration (µmol/min)		Oxygen consumption rate (µmol/g/min)	
pCO_2	Temperature	*n*	Mean	SD	Mean	SD	Mean	SD	Mean	SD
Ambient	Ambient	13	41.6	5.5	5.4	1.8	0.320	0.138	0.173	0.074
	High	13	40.4	5.2	5.5	1.5	0.530	0.181	0.259	0.178
High	Ambient	9	40.2	4.1	4.8	1.1	0.322	0.163	0.201	0.064
	High	11	39.7	5.6	5.1	2	0.609	0.224	0.172	0.049
Ambient	Shock high	2	39.5	0.7	4.3	0.9	0.545	0.074	0.654	0.335

Inflow oxygen concentrations were determined using data from blank chambers during each assay and indicate adequate oxygenation of water. The two-way ANOVA indicated no significant effect of temperature or pCO_2 on the oxygen consumption of juvenile blue crabs (temperature: $F_{1,43} = 1.06$, $P = 0.31$; pCO_2: $F_{1,43} = 0.98$, $P = 0.32$). Temperature treatment "shock high" summarizes data from the temperature shock experiment, indicating that the oxygen consumption rate of crabs exposed to a rapid increase in temperature was significantly higher than the oxygen consumption rate of crabs after they had acclimated to ambient temperature conditions ($t_{2,25} = 2.98$, $P = 0.016$).

Downloaded From: https://complete.bioone.org/journals/Journal-of-Shellfish-Research on 16 Jul 2024
Terms of Use: https://complete.bioone.org/terms-of-use

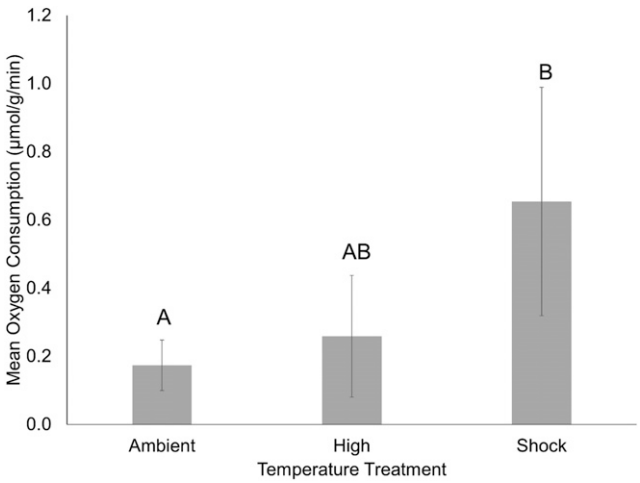

Figure 3. Oxygen consumption rate (µmol/g/min) of crabs during the temperature shock experiment. Ambient temperature treatment represents the mean oxygen consumption rate of crabs acclimated and measured at ambient temperature/ambient pCO_2, high temperature treatment represents the mean oxygen consumption rate of crabs acclimated and measured at high temperature/ambient pCO_2, and shock temperature treatment represents the mean oxygen consumption rate of crabs acclimated at ambient temperature/ambient pCO_2 but measured at high temperature/ambient pCO_2. The mean oxygen consumption rate of crabs acclimated and measured at ambient temperature/ambient pCO_2 was significantly lower than the mean oxygen consumption rate of crabs acclimated at ambient temperature/ambient pCO_2 and measured at high temperature/ambient pCO_2 ($t_{2,25} = 2.98$, $P = 0.016$). Error bars represent one SD and letters represent statistically different groups.

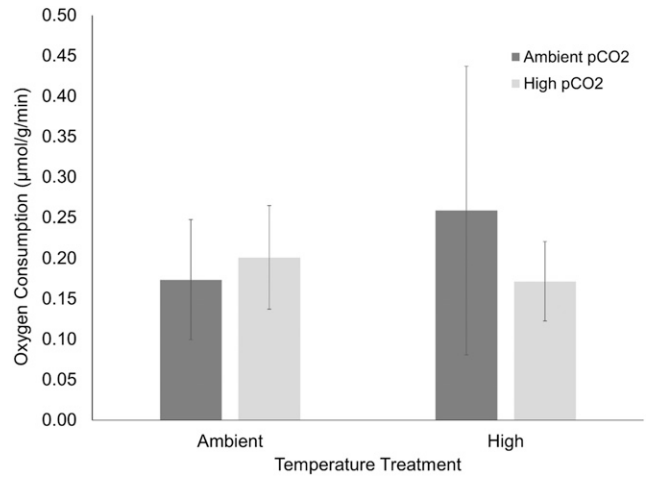

Figure 4. Oxygen consumption rate (µmol/g/min) of crabs exposed to the individual and combined effects of increased temperature and pCO_2. There was no significant effect of increased temperature or pCO_2 on the oxygen consumption rate of crabs in this experiment (temperature: $F_{1,43} = 1.06$, $P = 0.31$; pCO_2: $F_{1,43} = 0.98$, $P = 0.32$). Error bars represent SD.

tested at ambient temperature and that of crabs acclimated and tested at high temperature ($t_{2,25} = 1.31$, $P = 0.40$).

Temperature/pCO_2 Experiment

The three-way ANOVA indicated no significant effect of block and no significant interaction between temperature and pCO_2 on the mass-specific oxygen consumption rate of crabs ($P > 0.05$ for all tests), and therefore, the model was rerun without block and interaction effects to improve the power for detecting main effects. The two-way ANOVA indicated that temperature and pCO_2 did not have a significant effect on the mass-specific oxygen consumption rates of juvenile crabs tested in this study (temperature: $F_{1,43} = 1.06$, $P = 0.31$; pCO_2: $F_{1,43} = 0.98$, $P = 0.32$; Table 2, Fig. 4).

DISCUSSION

We sought to examine potential physiological impacts of changes in mean temperature and pCO_2 expected in the mesohaline Chesapeake Bay in the year 2100 on the blue crab oxygen consumption rate. The data from this study indicate that juvenile blue crabs are metabolically resilient to predicted future levels of temperature and pCO_2 in the Chesapeake Bay. Importantly, changes to mean conditions will not occur as an acute temperature and pCO_2 shock, and individuals will have the potential to acclimate to these conditions. Thus, individuals were exposed to increased temperature and pCO_2 for a period of two molts (approximately 30 days), which provided a period of acclimation to conditions before the measurement of oxygen consumption. Following exposure to future climate conditions for a period of two molts, neither temperature nor pCO_2 significantly influenced the mass-specific oxygen consumption rate of crabs. This study was designed to quantify the response of blue crabs to expected increases in mean temperature and pCO_2 levels and cannot speak to the effects of predicted increases in the intensity of diurnal and seasonal cycling of environmental conditions in the Chesapeake Bay.

The oxygen consumption rate measurements from this study agree with previous work conducted on the effect of temperature on the oxygen consumption rate of crustaceans. Table 3 summarizes results from several previous studies quantifying the effects of temperature on the oxygen consumption rate of *Callinectes sapidus* and another crab species, *Cancer magister*. Although there is variability in the mean oxygen consumption values observed at a given temperature, the coefficients of variation (CV) for the data are similar and highlight the high variability of oxygen consumption rates throughout this taxonomic group. Apart from the extreme values observed by Leffler (1972) at low temperatures, the Q_{10} values are similar among studies, indicating a predictable increase in oxygen consumption rate with temperature. It is worth noting that variability in estimates in Table 3 is likely due to the considerable differences in species, ontogeny, husbandry, and measurement methods. For example, the geographic range of the adults of the two species in Table 3 is markedly different; *C. magister* is found in the deep waters of the North Pacific, whereas *C. sapidus* is largely found in the estuarine waters of the North Atlantic. Although juvenile *C. magister* has been found in estuarine waters, the ontogenetic shift in habitat use may impact the metabolic response of juveniles.

The temperature shock experiment showed that the mass-specific oxygen consumption rate of crabs does increase significantly when exposed to a sudden increase in temperature; the mass-specific oxygen consumption rate of crabs that were acclimated to and measured at high temperature was lower than the mass-specific oxygen consumption rate of crabs acclimated

Downloaded From: https://complete.bioone.org/journals/Journal-of-Shellfish-Research on 16 Jul 2024
Terms of Use: https://complete.bioone.org/terms-of-use

TABLE 3.

Summary of the effects of temperature on the oxygen consumption rate of decapod crustaceans.

Study	Year	Species	Method	Temperature (°C)	*n*	Mass (g)	Mean O_2 (μmol/g/min)	SD	Coefficient of variation	Q_{10}
This study	2017	*Callinectes sapidus*	Flow-through chamber	26	13	5.4	0.173	0.074	0.427	3.53
				31	15	5.3	0.259	0.178	0.689	–
Booth and McMahon	1992	*C. sapidus*	Respiratory mask	13	6	162	0.010	0.004	0.373	3.10
				20	6	170	0.022	0.005	0.224	2.00
				28	6	154	0.040	0.015	0.368	–
Leffler	1972	*C. sapidus*	Closed chamber	13	4	4	0.010	0.004	0.398	12.29
				20	4	4	0.055	0.011	0.208	0.74
				27	4	4	0.045	0.006	0.140	3.01
				34	4	4	0.097	0.019	0.196	–
Brown and Terwilliger	1999	*Cancer magister*	Closed chamber	10	4	4	0.021	0.006	0.286	2.14
				20	4	4	0.045	0.015	0.333	–
Guteruth and Armstrong	1989	*C. magister*	Differential respirometer	6	20	4.8	0.223	0.067	0.298	1.00
				10	23	4.8	0.186	0.071	0.384	4.50
				14	15	4.8	0.335	0.173	0.516	5.50
				18	29	4.8	0.670	0.401	0.598	–

Coefficient of variation was calculated as the ratio of SD to the mean oxygen consumption rate. Q_{10} temperature coefficient was calculated as $(R_2/R_1)^{\wedge}[10/(T_2 - T_1)]$ for temperature pairs as listed in the table.

to ambient temperature but measured at high temperature. Extreme weather events (including heat waves) are predicted to increase in frequency and intensity in the future (Maloney et al. 2014). The significant increase in oxygen consumption rates of crabs exposed to a sudden increase in temperature in this study may be indicative of the response of juvenile blue crabs to sudden increases in temperature in the future. The impact of these sudden increases in temperature on the blue crab population as a whole will be determined by the length and intensity of these events, and how these events coincide with critical life history events in the blue crab life cycle.

The significant positive relationship between temperature and oxygen consumption rate in blue crabs is well established (Leffler 1972, Booth & McMahon 1992), despite the lack of an observed relationship in the current study. The Q_{10} value for the crabs at ambient pCO_2 in this study was over three (Table 3), indicating a metabolic response, in general, to increasing temperature. The high variability present in the data likely contributed to the lack of an observed significant temperature effect. For example, the coefficients of variation by treatment in this study ranged from 28% to 73%, underscoring the variability both within and among treatments. In addition, the crabs in this study may have acclimated to conditions during the 30-day period before the measurement of the oxygen consumption rate, as has been observed in other species, including fish (Fangue et al. 2014), zooplankton (Zeis et al. 2004), and salamanders (Brown & Fitzpatrick 1981). Measurement of mass-specific oxygen consumption rates throughout the acclimation period would be necessary to conclusively determine whether the individuals in this study had truly acclimated to conditions.

Temperature treatment levels in this study were selected to represent predicted changes in mean summer temperature in the Chesapeake Bay in the year 2100, not to push the crabs to their physiological limit. The lack of a significant effect of temperature on oxygen consumption of crabs in this study may reflect this choice; but it is also possible that the high temperature treatment level was not different enough from the ambient temperature treatment level to elicit a metabolic response because it was only 5°C higher than current observed summer temperatures (26°C and 31°C). The annual summertime mean temperatures from 1911 to 2009 ranged between 20°C and 24°C in the Chesapeake Bay (Najjar et al. 2009), making both of the temperature treatment levels in this study near the upper range of what blue crabs in the Chesapeake Bay regularly experience. In other studies that demonstrated a significant temperature effect on the oxygen consumption rate of juvenile decapod crustaceans, temperature differences were more extreme and near the lower end of the thermal window (Leffler 1972, Gutermuth & Armstrong 1989, Brown & Terwilliger 1999).

The apparent resilience to large differences in pCO_2 (800–8,000 μatm) observed in this study may be related to the large range of pCO_2 conditions that blue crabs are exposed to throughout their ontogeny. Because larval crabs develop in oceanic conditions, the pCO_2 levels in that system are likely lower (around 500–600 μatm) and more stable on daily and seasonal scales than the pCO_2 conditions that juvenile and adult crabs are exposed to in the estuarine environment. In a meta-analysis of the respiratory effects of elevated temperature, high pCO_2, and their interaction, Lefevre (2016) found a small decline in the absolute aerobic scope (determined as the difference between minimal and maximal rates of aerobic respiration) of crustaceans exposed to increased pCO_2; but this effect was species- and life-stage–dependent, and it was not observed in juveniles. Declines in the oxygen consumption rate have been observed in embryos of the porcelain crab *Petrolisthes cinctipes* exposed to pCO_2 levels of 1,300 μatm and adults of the velvet swimming crab *Necora puber* exposed to pCO_2 levels above 12,000 μatm (Small et al. 2010, Carter et al. 2013). By contrast, a pCO_2 level of 3,200 μatm did not elicit a significant response in the oxygen uptake of adult velvet swimming crabs in the same study. Furthermore, increased pCO_2 had no effect on the oxygen consumption rate of larval and juvenile porcelain crabs (Carter et al. 2013) exposed to the same pCO_2 level as

Downloaded From: https://complete.bioone.org/journals/Journal-of-Shellfish-Research on 16 Jul 2024
Terms of Use: https://complete.bioone.org/terms-of-use

aforementioned (1,300 μatm) and early stage larvae of the European lobster *Homarus gammarus* exposed to pCO_2 levels of 1,100 μatm (Small et al. 2015). The variability in the metabolic response of crustaceans to increased pCO_2 is representative of the wide variety of life stages and species (and, therefore, environments/habitats) that have been examined to date, underscoring the importance of species- and ontogeny-specific studies when quantifying the metabolic impact of climate change on this taxon.

The estimate of the mass-specific oxygen consumption rate at ambient conditions was almost identical to the estimate of the mass-specific oxygen consumption rate at high temperature/high pCO_2 in this study. Although no significant main effects were observed in this study, it is worth noting the similarity in the observed mass-specific oxygen consumption rates in the "least stressful" and the "most stressful" combinations of temperature and pCO_2. The juvenile blue crabs in this study were, therefore, able to acclimate to large increases in temperature and pCO_2, and this provides evidence for a major physiological influence on the expression of a thermodynamically driven response. This has recently been observed in the oxygen consumption rate of the adult porcelain crab *Petrolisthes violaceus* (Gaitán-Espitia et al. 2017) exposed to a latitudinal cline in temperatures. It is also possible that the similarity between the oxygen consumption rates of blue crabs at ambient temperature/ambient pCO_2 and the rates at high temperature/high pCO_2 is indicative of the onset of metabolic depression in response to increased environmental stress, which has been observed in the adult edible crab *Cancer pagurus* (Metzger et al. 2007), the adult spider crab *Maja squinado* (Frederich & Pörtner 2000), and the nektonic shrimp *Metapenaeus joyneri* (Dissanayake & Ishimatsu 2011) exposed to increased pCO_2 conditions. Paired data quantifying the oxygen consumption rate of individual juvenile blue crabs exposed to ambient and high temperature/high pCO_2 conditions would be necessary to understand the mechanism (acclimation versus metabolic depression) at work in the oxygen consumption response of blue crabs.

Although the mechanism of the metabolic response of juvenile blue crabs to increases in temperature and pCO_2 is difficult to quantify using the data from this study, there is likely some metabolic cost to the regulation of the internal environment in the face of changing environmental conditions. The potential metabolic cost could be masked in the results from this study because of the remarkable ability of blue crabs to regulate their internal chemistry (Towle et al. 1976, Henry & Kormanik 1985, Mangum et al. 1985). It is also possible that the metabolic cost is constrained to only the gills in blue crabs, as has been observed in juvenile blue crabs exposed to an osmotic gradient in the study by Kinsey et al. (2003). In that study, citrate synthase activity was significantly higher in the gill tissue of juvenile crabs exposed to low salinity than in the gill tissue of their adult counterparts, but no overall effect on the capacity for energy metabolism was observed. Future studies quantifying changes in the enzymatic activity of crab gill tissue and overall changes in hemolymph chemistry of crabs exposed to climate change stressors would be a useful extension of this work.

Because the estuarine environment varies on spatial and temporal scales (both seasonally and daily), plastic physiological responses are advantageous for species such as blue crabs that live in these environments. For example, juvenile blue crabs migrate from their ingress location at the estuarine mouth and disperse throughout the estuary over the course of a few months and are, thus, exposed to a wide range of environmental conditions during that time (Etherington & Eggleston 2003). Variability in physiological parameters such as oxygen consumption rate may help crabs survive this migration and could contribute to population success in the face of a changing climate. Although there was no significant effect of increases in temperature or pCO_2 on mean oxygen consumption rates in this study, the high variability present in the oxygen consumption rates of crabs in this study provides an example of variation in the physiological response of an estuarine species to climate change stressors. The high variability also limited the finding of statistical significance in the data, despite the well-documented response in the oxygen consumption rate of other poikilotherms to increased temperature (Kinne 1964, Pörtner 2002). This variability in key physiological parameters may equip this species to survive and thrive as the climate continues to change in the future as the ocean climate continues to warm, acidify, and become more variable (Feely et al. 2009, Miller et al. 2009, Najjar et al. 2010, Stocker et al. 2013).

The data from this study, combined with previous work on the effects of increased temperature and acidity on juvenile blue crabs in the Chesapeake Bay, provide a window into the overall effect of these environmental changes on this critically important species. Glandon and Miller (2017) found no effect of increased pCO_2 on juvenile blue crab growth, despite positive responses to concurrent warming. The observed increase in growth rate at high temperature was coupled with a significant increase in food consumption, providing the fuel necessary to sustain higher growth rates at higher temperatures. In a complementary study, Glandon et al. (2018) observed juvenile crab carapace thickness and high-magnesium calcite (HMC) concentration were significantly reduced in crabs exposed to increased temperature, highlighting a potential cost for the observed increases in growth in the 2017 study. Despite the lack of an observed effect of increased pCO_2 on crab growth, significant changes to the carapace composition of crabs exposed to increased acidity were observed in the 2018 study. Crab carapaces contained significantly more HMC, but this was paired with an increase in magnesium content, which may increase the solubility of the HMC compound and could be detrimental to the protective ability of the carapace. The data from the current study reveal no effect of increased temperature or pCO_2 on juvenile crab oxygen consumption. The crabs may have acclimated to experimental conditions, but it is also possible that metabolic depression in the high temperature/high pCO_2 treatment was at play. Taken together, the available data on the effects of increased temperature and acidity on juvenile blue crabs indicate that this species is resilient to the predicted future environmental changes. The observed increases in growth rates in response to increased temperature were sustained by increased food consumption, and overall oxygen consumption rates were not impacted by the increases in temperature once crabs had acclimated to the conditions. Although increased temperature may have a negative effect on the integrity of the crab carapace, the biological relevance of the observed changes to carapace chemistry is yet to be determined. Juvenile blue crabs also appear to be resilient to predicted increases in pCO_2 levels; no significant changes in growth, food consumption, or overall

Downloaded From: https://complete.bioone.org/journals/Journal-of-Shellfish-Research on 16 Jul 2024
Terms of Use: https://complete.bioone.org/terms-of-use

oxygen consumption were observed in these studies. Similar to the effect of increased temperature on the crab carapace, the biological significance of the observed (potentially counteractive) effects of increased pCO_2 on juvenile blue crab carapace is yet to be determined. It is important to note that the patterns described previously apply to the juvenile life stage of blue crabs and may not hold true for the larval or adult life stage. Continued work throughout the ontogeny of the blue crab is critical to fully understand the future of this important estuarine species in the face of a warmer, more acidified marine environment.

ACKNOWLEDGMENTS

We gratefully acknowledge A. W. Miller, J. Pierson, and J. Schijf for guidance throughout the project and comments on earlier versions of this article. The two anonymous reviewers and the special issue editor greatly improved the presentation of this study. The assistance of R. Brodnick, C. Goethel, and S. Shahrestani made the measurement of crab oxygen consumption rates possible. This is UMCES contribution number 5527. This work was supported by a Maryland Sea Grant Coastal Resilience and Sustainability Fellowship to H. L. G.

LITERATURE CITED

Baird, D. & R. E. Ulanowicz. 1989. The seasonal dynamics of the Chesapeake Bay ecosystem. *Ecol. Monogr.* 59:329–364.

Beaupre, S. & A. Dunham. 1995. A comparison of ratio-based and covariance analyses of a nutritional data set. *Funct. Ecol.* 9:876–880.

Beniash, E., A. Ivanina, N. S. Lieb, I. Kurochkin & I. M. Sokolova. 2010. Elevated level of carbon dioxide affects metabolism and shell formation in oysters *Crassostrea virginica*. *Mar. Ecol. Prog. Ser.* 419:95–108.

Bertram, D. F., T. J. Miller & W. C. Leggett. 1997. Individual variation in growth and development during the early life stages of winter flounder, *Pleuronectes americanus*. *Fish. Bull.* 95:1–10.

Boesch, D., F. Dawson, R. Summers, A. Busalacchi, W. Boicourt, D. Cahoon, F. Coale, V. Coles, R. Dickerson & W. Eichbaum. 2008. Global warming and the free state. Report of the Scientific and Technical Working Group, Marlyand Commission on Climate Change. University of Maryland Center for Environmental Science, Cambridge, MD.

Booth, C. E. & B. R. McMahon. 1992. Aerobic capacity of the blue crab, *Callinectes sapidus*. *Physiol. Zool.* 65:1074–1091.

Breteler, W. K. 1975. Food consumption, growth and energy metabolism of juvenile shore crabs, *Carcinus maenas*. *Neth. J. Sea Res.* 9:255–272.

Brown, A. C. & N. B. Terwilliger. 1999. Developmental changes in oxygen uptake in *Cancer magister* (Dana) in response to changes in salinity and temperature. *J. Exp. Mar. Biol. Ecol.* 241:179–192.

Brown, A. V. & L. C. Fitzpatrick. 1981. Metabolic acclimation to temperature in the Ozark salamander *Plethodon dorsalis*, angusticlavius. *Comp. Biochem. Physiol. A Physiol.* 69:499–503.

Běhrádek, J. 1930. Temperature coefficients in biology. *Biol. Rev. Camb. Philos. Soc.* 5:30–58.

Cai, W.-J. & Y. Wang. 1998. The chemistry, fluxes, and sources of carbon dioxide in the estuarine waters of the Satilla and Altamaha rivers, Georgia. *Limnol. Oceanogr.* 43:657–668.

Carter, H. A., L. Ceballos-Osuna, N. A. Miller & J. H. Stillman. 2013. Impact of ocean acidification on metabolism and energetics during early life stages of the intertidal porcelain crab *Petrolisthes cinctipes*. *J. Exp. Biol.* 216:1412–1422.

Chang, E. S. 1995. Physiological and biochemical changes during the molt cycle in decapod crustaceans: an overview. *J. Exp. Mar. Biol. Ecol.* 193:1–14.

Comeau, S., R. Jeffree, J.-L. Teyssié & J.-P. Gattuso. 2010. Response of the arctic pteropod *Limacina helicina* to projected future environmental conditions. *PLoS One* 5:e11362.

Cooley, S. R. & S. C. Doney. 2009. Anticipating ocean acidification's economic consequences for commercial fisheries. *Environ. Res. Lett.* 4:1–8.

Cunningham, S. C., A. M. Smith & M. D. Lamare. 2015. The effects of elevated pCO_2 on growth, shell production and metabolism of cultured juvenile abalone, *Haliotis iris*. *Aquacult. Res.* 47:2375–2392.

Dickson, A., J. Afghan & G. Anderson. 2003. Reference materials for oceanic CO_2 analysis: a method for the certification of total alkalinity. *Mar. Chem.* 80:185–197.

Dickson, A. G. 1990. Standard potential of the reaction: $AgCl_{(s)} + 12H_{2(g)} = Ag_{(s)} + HCl_{(aq)}$ and the standard acidity constant of the ion HSO^{4-} in synthetic sea water from 273.15 to 318.15 K. *J. Chem. Thermodyn.* 22:113–127.

Dickson, A. G., C. L. Sabine & J. R. Christian. 2007. Guide to best practices for ocean CO_2 measurements. Sidney, British Columbia, Canada: North Pacific Marine Science Organization. 196 pp.

Dissanayake, A. & A. Ishimatsu. 2011. Synergistic effects of elevated CO_2 and temperature on the metabolic scope and activity in a shallow-water coastal decapod (*Metapenaeus joyneri*; Crustacea: Penaeidae). *ICES J. Mar. Sci.* 68:1147–1154.

Doney, S. C. & D. S. Schimel. 2007. Carbon and climate system coupling on timescales from the precambrian to the anthropocene. *Annu. Rev. Environ. Resour.* 32:31–66.

Edmond, J. M. 1970. High precision determination of titration alkalinity and total carbon dioxide content of sea water by potentiometric titration. *Deep-Sea Res. Oceanogr. Abstr.* 17: 737–750.

Eriksson, S. & A.-M. Edlund. 1977. On the ecological energetics of 0-group *Carcinus maenas* (L.) from a shallow sandy bottom in Gullmar fjord, Sweden. *J. Exp. Mar. Biol. Ecol.* 30:233–248.

Etherington, L. L. & D. B. Eggleston. 2003. Spatial dynamics of large-scale, multistage crab (C*allinectes sapidus*) dispersal: determinants and consequences for recruitment. *Can. J. Fish. Aquat. Sci.* 60:873–887.

Fangue, N. A., M. A. Wunderly, T. F. Dabruzzi & W. A. Bennett. 2014. Asymmetric thermal acclimation responses allow sheepshead minnow *Cyprinodon variegatus* to cope with rapidly changing temperatures. *Physiol. Biochem. Zool.* 87:805–816.

Feely, R., S. Doney & S. Cooley. 2009. Ocean acidification: present conditions and future changes in a high-CO_2 world. *Oceanography* 22:36–47.

Fox, J. & S. Weisberg. 2010. An R companion to applied regression. London: Sage Publications. 472 pp.

Frederich, M. & H. O. Pörtner. 2000. Oxygen limitation of thermal tolerance defined by cardiac and ventilatory performance in spider crab, *Maja squinado*. *Am. J. Physiol. Regul. Integr. Comp. Physiol.* 279:R1531–R1538.

Frieder, C. A., S. L. Applebaum, T.-C. F. Pan, D. Hedgecock & D. T. Manahan. 2016. Metabolic cost of calcification in bivalve larvae under experimental ocean acidification. *ICES J. Mar. Sci.* 74:941–954.

Gaitán-Espitia, J. D., L. D. Bacigalupe, T. Opitz, N. A. Lagos, S. Osores & M. A. Lardies. 2017. Exploring physiological plasticity and local thermal adaptation in an intertidal crab along a latitudinal cline. *J. Therm. Biol.* 68A:14–20.

Gillooly, J. F., J. H. Brown, G. B. West, V. M. Savage & E. L. Charnov. 2001. Effects of size and temperature on metabolic rate. *Science* 293:2248–2251.

Glandon, H. L., K. H. Kilbourne, J. Schijf & T. J. Miller. 2018. Counteractive effects of increased temperature and pCO_2 on the thickness and chemistry of the carapace of juvenile blue crab,

Downloaded From: https://complete.bioone.org/journals/Journal-of-Shellfish-Research on 16 Jul 2024
Terms of Use: https://complete.bioone.org/terms-of-use

Callinectes sapidus, from the Patuxent River, Chesapeake Bay. *J. Exp. Mar. Biol. Ecol.* 498:39–45.

Glandon, H. L. & T. J. Miller. 2017. No effect of high pCO_2 on juvenile blue crab, *Callinectes sapidus*, growth and consumption despite positive responses to concurrent warming. *ICES J. Mar. Sci.* 74:1201–1209.

Gutermuth, F. B. & D. A. Armstrong. 1989. Temperature-dependent metabolic response of juvenile Dungeness crab *Cancer magister* Dana: ecological implications for estuarine and coastal populations. *J. Exp. Mar. Biol. Ecol.* 126:135–144.

Henry, R. P. & G. A. Kormanik. 1985. Carbonic anhydrase activity and calcium deposition during the molt cycle of the blue crab *Callinectes sapidus*. *J. Crustac. Biol.* 5:234–241.

Hu, M. Y., I. Casties, M. Stumpp, O. Ortega-Martinez & S. Dupont. 2014. Energy metabolism and regeneration are impaired by seawater acidification in the infaunal brittlestar *Amphiura filiformis*. *J. Exp. Biol.* 217:2411–2421.

Hönisch, B., A. Ridgwell, D. N. Schmidt, E. Thomas, S. J. Gibbs, A. Sluijs, R. Zeebe, L. Kump, R. C. Martindale & S. E. Greene. 2012. The geological record of ocean acidification. *Science* 335: 1058–1063.

Kennedy, V. S., M. Oesterling & W. A. Van Engel. 2007. History of blue crab fisheries on the U.S. Atlantic and Gulf coasts. In: Kennedy, V. S. & L. E. Cronin, editors. The blue crab *Callinectes sapidus*. College Park, MD: Maryland Sea Grant College. pp. 655–710.

Kinne, O. 1964. Non-genetic adaptation to temperature and salinity. *Helgol. Wiss. Meeresunters.* 9:433–458.

Kinsey, S. T., E. Buda & J. Nordeen. 2003. Scaling of gill metabolic potential as a function of salinity in the euryhaline crab, *Callinectes sapidus* Rathbun. *Physiol. Biochem. Zool.* 76:105–114.

Kroeker, K. J., R. L. Kordas, R. Crim, I. E. Hendriks, L. Ramajo, G. S. Singh, C. M. Duarte & J. P. Gattuso. 2013. Impacts of ocean acidification on marine organisms: quantifying sensitivities and interaction with warming. *Glob. Chang. Biol.* 19: 1884–1896.

Kroeker, K. J., R. L. Kordas, R. N. Crim & G. G. Singh. 2010. Meta-analysis reveals negative yet variable effects of ocean acidification on marine organisms. *Ecol. Lett.* 13:1419–1434.

Lannig, G., S. Eilers, H. O. Poertner, I. M. Sokolova & C. Bock. 2010. Impact of ocean acidification on energy metabolism of oyster, *Crassostrea gigas*-changes in metabolic pathways and thermal response. *Mar. Drugs* 8:2318–2339.

Lefevre, S. 2016. Are global warming and ocean acidification conspiring against marine ectotherms? A meta-analysis of the respiratory effects of elevated temperature, high CO_2 and their interaction. *Conserv. Physiol.* 4:cow009.

Leffler, C. 1972. Some effects of temperature on the growth and metabolic rate of juvenile blue crabs, *Callinectes sapidus*, in the laboratory. *Mar. Biol.* 14:104–110.

Lewis, E. & D. Wallace. 1998. Program developed for CO_2 system calculations. Oak Ridge, TN: Carbon Dioxide Information Analysis Center, Oak Ridge National Laboratory, US Department of Energy. ORNL/CDIAC-105.

Lipcius, R. N., D. B. Eggleston, K. L. Heck, R. D. Seitz & J. van Montfrans. 2007. Ecology of postlarval and young juvenile blue crabs. In: Kennedy, V. S. & L. E. Cronin, editors. The blue crab, *Callinectes sapidus*. College Park, MD: Maryland Sea Grant College.

Maloney, E. D., S. J. Camargo, E. Chang, B. Colle, R. Fu, K. L. Geil, Q. Hu, X. Jiang, N. Johnson & K. B. Karnauskas. 2014. North American climate in CMIP5 experiments: part III: assessment of twenty-first-century projections. *J. Clim.* 27:2230–2270.

Mangum, C., B. McMahon, P. Defur & M. Wheatly. 1985. Gas exchange, acid-base balance, and the oxygen supply to the tissues during a molt of the blue crab *Callinectes sapidus* gas exchange. *J. Crustac. Biol.* 5:188–206.

Matoo, O. B., A. V. Ivanina, C. Ullstad, E. Beniash & I. M. Sokolova. 2013. Interactive effects of elevated temperature and CO_2 levels on metabolism and oxidative stress in two common marine bivalves (*Crassostrea virginica* and *Mercenaria mercenaria*). *Comp. Biochem. Physiol. A Mol. Integr. Physiol.* 164:545–553.

Metzger, R., F. J. Sartoris, M. Langenbuch & H. O. Pörtner. 2007. Influence of elevated CO_2 concentrations on thermal tolerance of the edible crab *Cancer pagurus*. *J. Therm. Biol.* 32:144–151.

Miller, A. W., A. C. Reynolds, C. Sobrino & G. F. Riedel. 2009. Shellfish face uncertain future in high CO_2 world: influence of acidification on oyster larvae calcification and growth in estuaries. *PLoS One* 4:e5661.

Miller, T. J. 2001. Matrix-based modeling of blue crab population dynamics with applications to the Chesapeake Bay. *Estuaries* 24:535–544.

Mojica Prieto, F. J. & F. J. Millero. 2002. The values of $pK_1 + pK_2$ for the dissociation of carbonic acid in seawater. *Geochem. Cosmochim. Acta* 66:2529–2540.

Najjar, R., L. Patterson & S. Graham. 2009. Climate simulations of major estuarine watersheds in the Mid-Atlantic region of the US. *Clim. Change* 95:139–168.

Najjar, R. G., C. R. Pyke, M. B. Adams, D. Breitburg, C. Hershner, M. Kemp, R. Howarth, M. R. Mulholland, M. Paolisso & D. Secor. 2010. Potential climate-change impacts on the Chesapeake Bay. *Estuar. Coast. Shelf Sci.* 86:1–20.

Navarro, J. M., C. Duarte, P. H. Manríquez, M. A. Lardies, R. Torres, K. Acuña, C. A. Vargas & N. A. Lagos. 2016. Ocean warming and elevated carbon dioxide: multiple stressor impacts on juvenile mussels from southern Chile. *ICES J. Mar. Sci.* 73:764–771.

Newell, R. & G. Branch. 1980. The influence of temperature on the maintenance of metabolic energy balance in marine invertebrates. *Adv. Mar. Biol.* 17:329–396.

O'Connor, M. I., M. F. Piehler, D. M. Leech, A. Anton & J. F. Bruno. 2009. Warming and resource availability shift food web structure and metabolism. *PLoS Biol.* 7:e1000178.

Pane, E. F. & J. P. Barry. 2007. Extracellular acid-base regulation during short-term hypercapnia is effective in a shallow-water crab, but ineffective in a deep-sea crab. *Mar. Ecol. Prog. Ser.* 334:1–9.

Pinheiro, J., D. Bates, S. DebRoy, D. Sarkar & R Core Team. 2015. nlme: linear and nonlinear mixed effects models. R package version 3.1-122. Available at: http://CRAN. R289 project. org/package= nlme.

Poehlman, E. T. & M. J. Toth. 1995. Mathematical ratios lead to spurious conclusions regarding age- and sex-related differences in resting metabolic rate. *Am. J. Clin. Nutr.* 61:482–485.

Pörtner, H.-O. 2002. Climate variations and the physiological basis of temperature dependent biogeography: systemic to molecular hierarchy of thermal tolerance in animals. *Comp. Biochem. Physiol. A Mol. Integr. Physiol.* 132:739–761.

Pörtner, H.-O. 2010. Oxygen-and capacity-limitation of thermal tolerance: a matrix for integrating climate-related stressor effects in marine ecosystems. *J. Exp. Biol.* 213:881–893.

Pörtner, H.-O. & A. P. Farrell. 2008. Physiology and climate change. *Science* 322:690–692.

Pörtner, H. O., M. Langenbuch & B. Michaelidis. 2005. Synergistic effects of temperature extremes, hypoxia, and increases in CO_2 on marine animals: from earth history to global change. *J. Geophys. Res.* 110:C09S10.

Pörtner, H. O., M. Langenbuch & A. Reipschläger. 2004. Biological impact of elevated ocean CO_2 concentrations: lessons from animal physiology and earth history. *J. Oceanogr.* 60:705–718.

R Core Team. 2015. R: a language and environment for statistical computing. Vienna, Austria: R Foundation for Statistical Computing.

Sigwart, J. D., G. Lyons, A. Fink, M. A. Gutowska, D. Murray, F. Melzner, J. D. Houghton & M. Y. Hu. 2015. Elevated pCO_2 drives lower growth and yet increased calcification in the early life history of the cuttlefish *Sepia officinalis* (Mollusca: Cephalopoda). *ICES J. Mar. Sci.* 73:970–980.

Downloaded From: https://complete.bioone.org/journals/Journal-of-Shellfish-Research on 16 Jul 2024
Terms of Use: https://complete.bioone.org/terms-of-use

Small, D., P. Calosi, D. White, J. I. Spicer & S. Widdicombe. 2010. Impact of medium-term exposure to CO_2 enriched seawater on the physiological functions of the velvet swimming crab *Necora puber*. *Aquat. Biol.* 10:11–21.

Small, D. P., P. Calosi, D. Boothroyd, S. Widdicombe & J. I. Spicer. 2015. Stage-specific changes in physiological and life-history responses to elevated temperature and pCO_2 during the larval development of the European lobster *Homarus gammarus* (L.). *Physiol. Biochem. Zool.* 88:494–507.

Stocker, T., D. Qin, G. Plattner, M. Tignor, S. Allen, J. Boschung, A. Nauels, Y. Xia, V. Bex & P. Midgley. 2013. IPCC 2013: summary for policymakers. In climate change 2013: the physical science basis. In: Contribution of Working Group I to the Fifth Assessment Report of the Intergovernmental Panel on Climate Change. Cambridge, UK: Cambridge University Press.

Todgham, A. E. & J. H. Stillman. 2013. Physiological responses to shifts in multiple environmental stressors: relevance in a changing world. *Integr. Comp. Biol.* 53:539–544.

Towle, D. W., G. E. Palmer & J. L. Harris. 1976. Role of gill $NA^+ + K^+$-dependent ATPase in acclimation of blue crabs (*Callinectes sapidus*) to low salinity. *J. Exp. Zool.* 196:315–321.

Uppström, L. R. 1974. The boron/chlorinity ratio of deep-sea water from the Pacific Ocean. *Deep-Sea Res. Oceanogr. Abstr* 21: 161–162.

Waldbusser, G. G. & J. E. Salisbury. 2014. Ocean acidification in the coastal zone from an organism's perspective: multiple system parameters, frequency domains, and habitats. *Annu. Rev. Mar. Sci.* 6:221–247.

Werner, E. E. 1986. Amphibian metamorphosis: growth rate, predation risk, and the optimal size at transformation. *Am. Nat.* 128:319–341.

Wilbur, H. M. & J. P. Collins. 1973. Ecological aspects of amphibian metamorphosis. *Science* 182:1305–1314.

Williams, A. B. 1984. Shrimps, lobsters, and crabs of the Atlantic coast of the eastern United States, Maine to Florida. Washington, D.C.: Smithsonian Institution Press. 550 pp.

Zeebe, R. E., A. Ridgwell & J. C. Zachos. 2016. Anthropogenic carbon release rate unprecedented during the past 66 million years. *Nat. Geosci.* 9:325–329.

Zeis, B., J. Maurer, O. Pinkhaus, E. Bongartz & R. J. Paul. 2004. A swimming activity assay shows that the thermal tolerance of *Daphnia magna* is influenced by temperature acclimation. *Can. J. Zool.* 82:1605–1613.

Downloaded From: https://complete.bioone.org/journals/Journal-of-Shellfish-Research on 16 Jul 2024
Terms of Use: https://complete.bioone.org/terms-of-use